Volanti 32" 4K PCAP monitor, p/n: 32-4KT
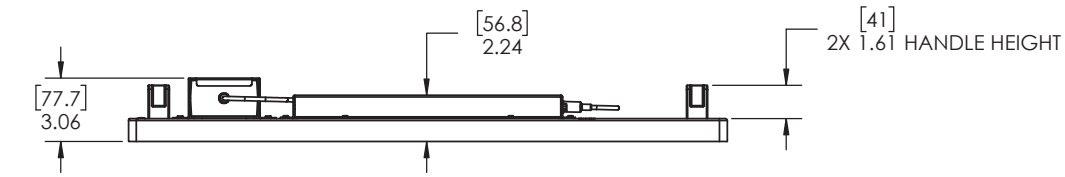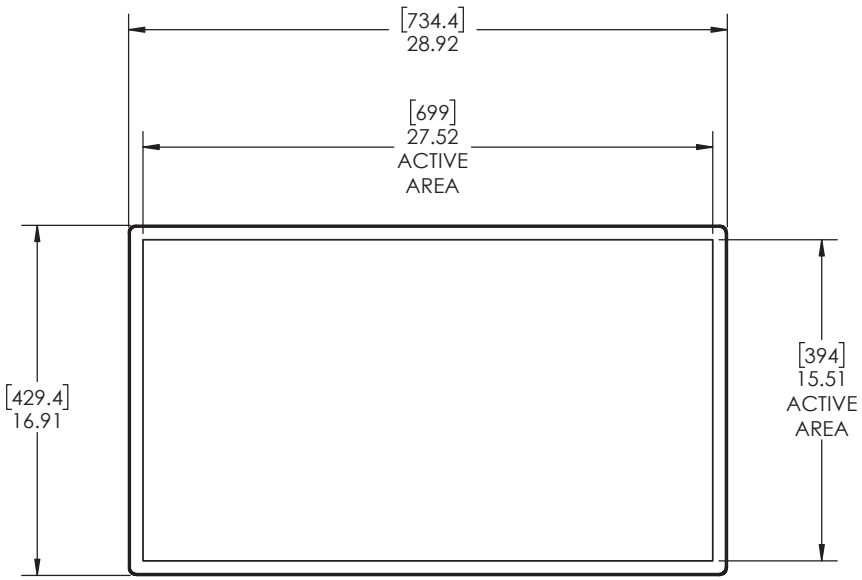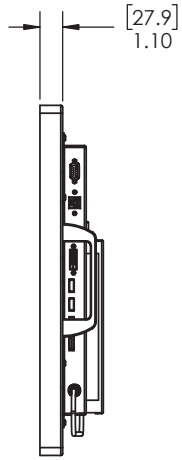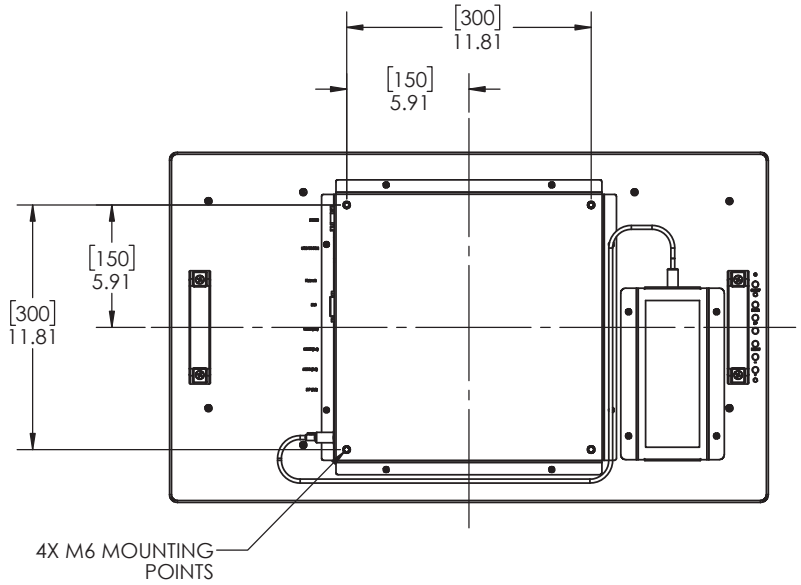
© 2018 Volanti Displays, v1.00